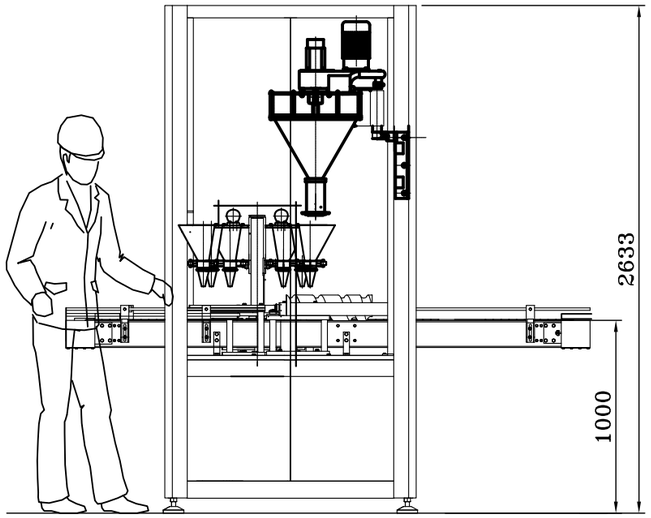

ELEVATION

Run Direction: Right to Left

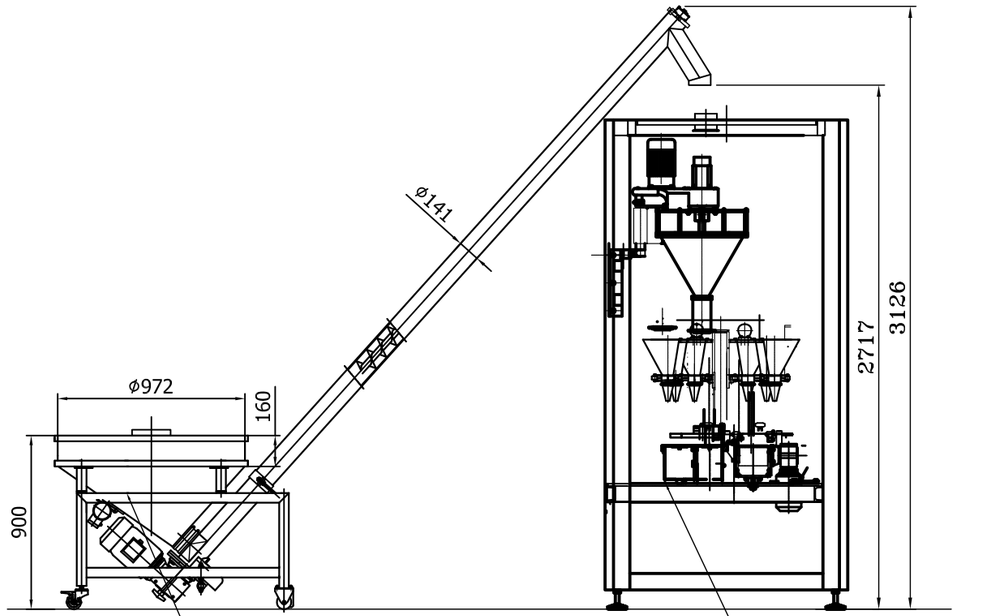

SIDE VIEW

SCREW CONVEYOR

MULTI AUGER
FILLING MACHINE

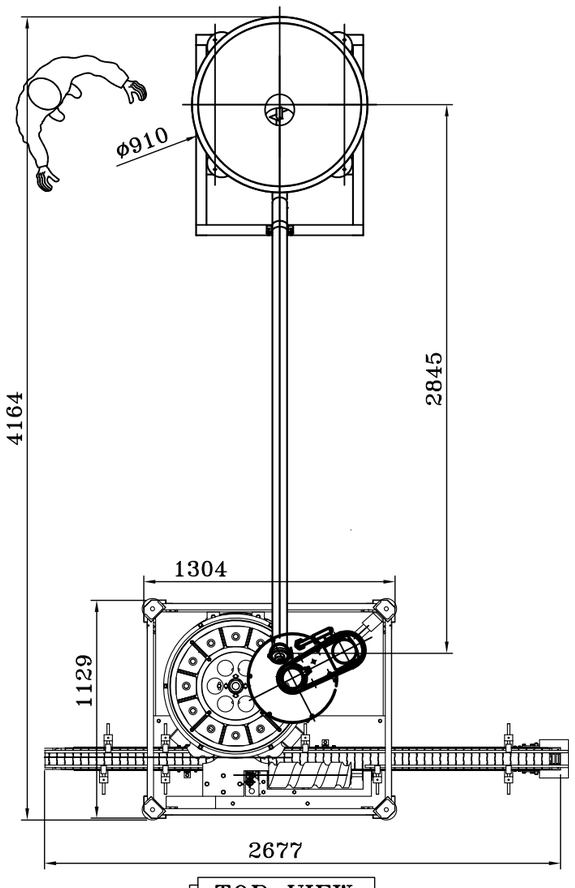

TOP VIEW

REV.	DESCRIPTION	DRG.	CHKD.	DATE

CLIENT :- M/S. INTENTECH TECHNOLOGIES PVT LTD.

PROJECT: STARCH POWDER PROJECT

LOCATION:

DRN.	MANGESH	TITLE :- POWDER AUGER FILLING MACHINE 1	QTY.	1 NO.
CHD.	MAHESH		SIZE	A3
DATE	12.04.2017		SHEET	1 OF 1
SCALE	NTS	DRG. NO. :- IET-LY1-AFM1-170412	REV.	RO

ALL DIMENSION ARE IN MM, UNTIL & UNLESS SPECIFIED

PRLIMINARY DRAWING		CONCEPT SALES DRAWING		DRAWING FOR APPROVAL	*	DRAWING FOR PLANNING		DRAWING FOR PRODUCTION		DRAWING FOR PROCESS		DRAWING FOR ERECTION