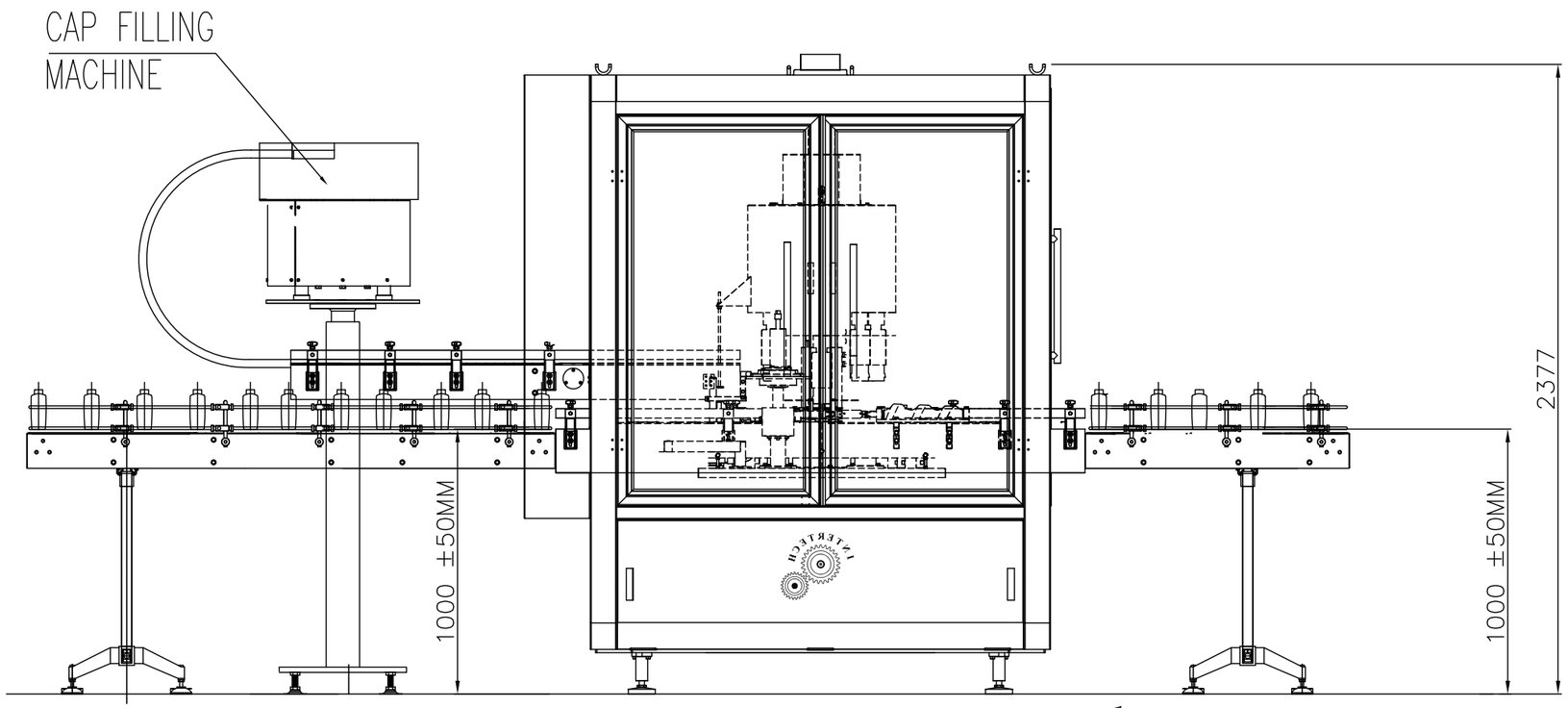

ELEVATION

Run Direction: Right to Left

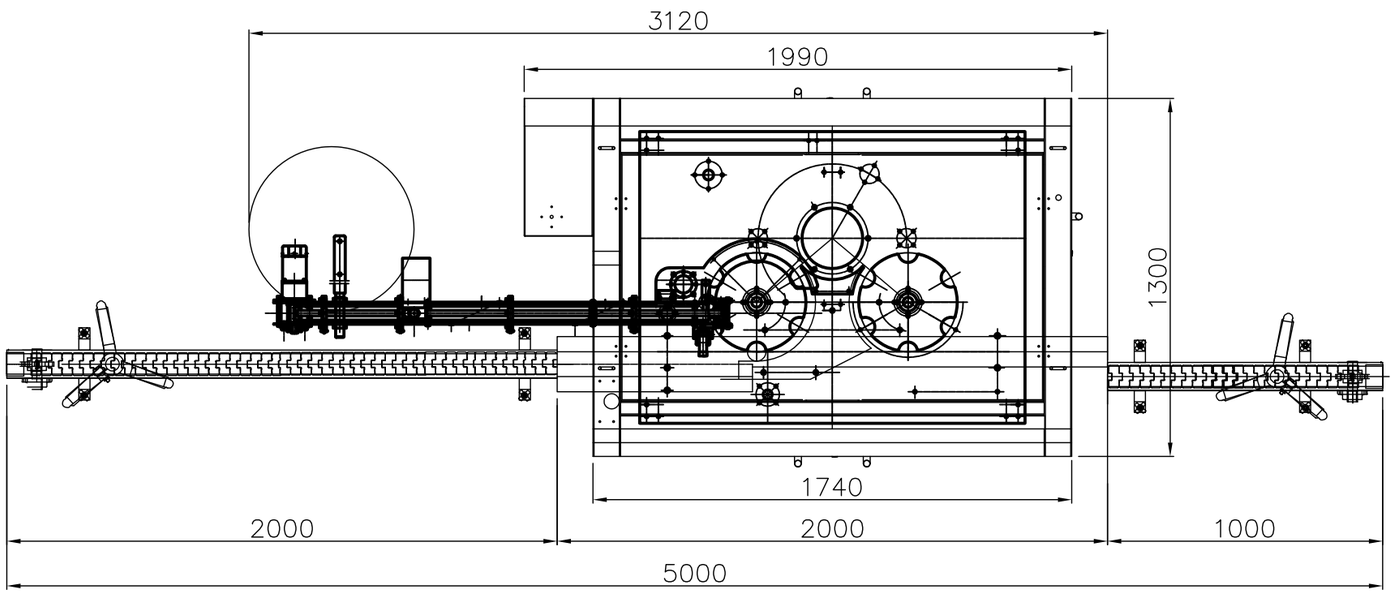

TOP VIEW

LINE-1-RTL

CAPPING MACHINE

CAPPING MACHINE-1

MAIN SPECIFICATION

OUTPUT (BPM) : 40 TO 60 BPM
POWER SUPPLY : 415V/3PH/50 C/S/AC
TOTAL LOAD : ??
APPLICATION : CAPPING

COMPRESSED AIR :
INLET AIR : 5 TO 6 BAR
REQUIRED AIR QTY : 3 CFM
IET MODEL : IET-

FILLING MACHINE DESCRIPTION

MACHINE DIMENSION.
LENGTH : 5000 MM
WIDTH : 1300 MM
HEIGHT : 2377 MM
CONVEYOR HEIGHT : 1000 ±50MM
MATERIAL : SS316 CONTACT PARTS

CHANGE PART REQUIRED

NOZZLES ARE FOR ONLY 100 GRAMS BOTTLES
EXTRA CHANGE PARTS ARE IN CLIENT SCOPE

BOTTLE SIZE

BOTTLE: 50, 100 & 200 GRAM
DIRECTION : FROM RIGHT TO LEFT
NO OF OPERATOR – 1
FILLING WEIGHT: 50–200 Gram

CONTROLS

CONTROLS: PLC SYSTEM

REV.	DESCRIPTION	DRG.	CHKD.	DATE

CLIENT :- M/S. INTERTECH TECHNOLOGIES PVT LTD.

PROJECT: STARCH POWDER PROJECT

LOCATION:

DRN.	KIRAN	TITLE :- AUTOMATIC CAPPING MACHINE-1	QTY.	1 NO.
CHD.	MAHESH		SIZE	A3
DATE	12.04.2017		SHEET	1 OF 1
SCALE	NTS	DRG. NO. :- IET-ACM1-170415	REV.	RO

ALL DIMENSION ARE IN MM, UNTIL & UNLESS SPECIFIED

PRELIMINARY DRAWING | CONCEPT SALES DRAWING | DRAWING FOR APPROVAL | * | DRAWING FOR PLANNING | DRAWING FOR PRODUCTION | DRAWING FOR PROCESS | DRAWING FOR ERECTION