ITEM	QTY	Part No.	DESCRIPTION	STOCK No.
1	1	F1731-00-1501	Conveyor Frame	
2	1	F1731-00-1502	Conveyor Frame	
3	1	F1731-00-1503	Conveyor Chain Cover	
4	1	F1731-00-3006	SA47 Motor Base Mounting	
5	1	F1731-00-3012	Drive Shaft	
6	2	F1731-11-0850	Stand With Motor Base	Hollow 100x50x6.0t
7	7	P0103-00-0815	Hex-Head Bolt	M8x15
8	20	P0103-00-1225	Hex-Head Bolt	M12x25
9	8	P0103-00-1230	Hex-Head Bolt	M12x30
10	8	P0130-00-0012	M12 Hex Nut	
11	7	P0150-00-0008	M8 Washer	
12	28	P0150-00-0012	M12 Washer	
13	7	P0160-00-0008	M8 Spring Washer	
14	28	P0160-00-0012	M12 Spring Washer	
15	1	P0206-25-2051	UCFL Flange Units (Oval)	UCFL205D1
16	1	P0401-50-1225	Double Drive Sprocket	RS50-12-D
17	2	P0410-50-0026	Roller Chain	RS50-26Link
18	6	P0410-50-0040	Roller Chain	RS50-40Link
19	1	P0501-47-0011	Drive Motor	SA47 DRN80MK4 i:24.77 0.55kW
20	4	P0708-20-1216	Levelling Feet	LM120M20160
21	8	P0803-02-8711	Heavy Duty Driven Roller	87Dia x 1100mmL

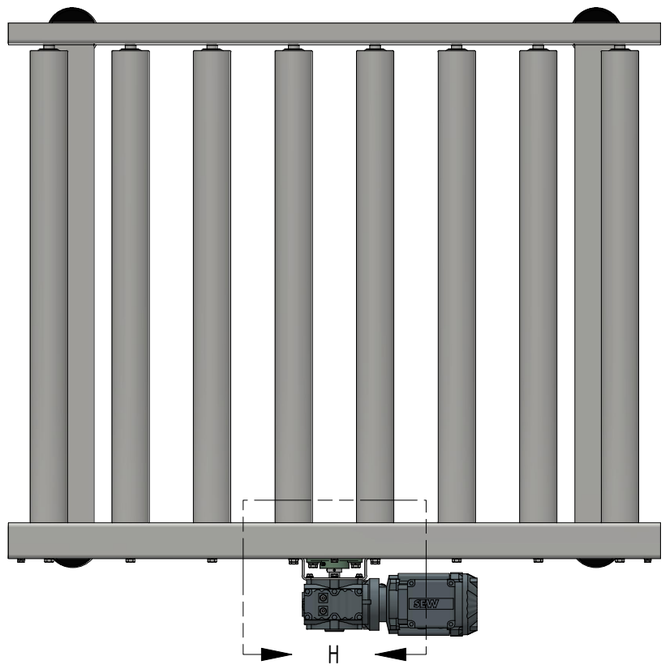

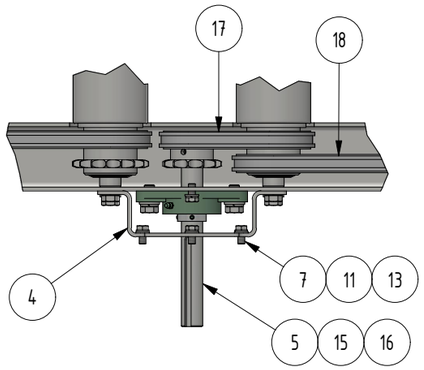

DETAIL H

